Sinusoidal Steady-State Analysis

Qi Xuan
Zhejiang University of Technology
Nov 2015

Structure

- The Sinusoidal Source
- The Sinusoidal Response
- The Phasor
- The Passive Circuit Elements in the Frequency Domain
- Kirchhoff's Laws in the Frequency Domain
- Series, Parallel, and Delta-to-Wye Simplifications
- Source Transformations and Thévenin-Norton Equivalent Circuits
- The Node-Voltage Method
- The Mesh-Current Method
- The Transformer
- The Ideal Transformer
- Phasor Diagrams

Why Sinusoidal Source?

- The generation, transmission, distribution, and consumption of electric energy occur under essentially sinusoidal steady-state conditions.
- An understanding of sinusoidal behavior makes it possible to predict the behavior of circuits with nonsinusoidal sources.
- Steady-state sinusoidal behavior often simplifies the design of electrical systems.

A Household
Distribution Circuit

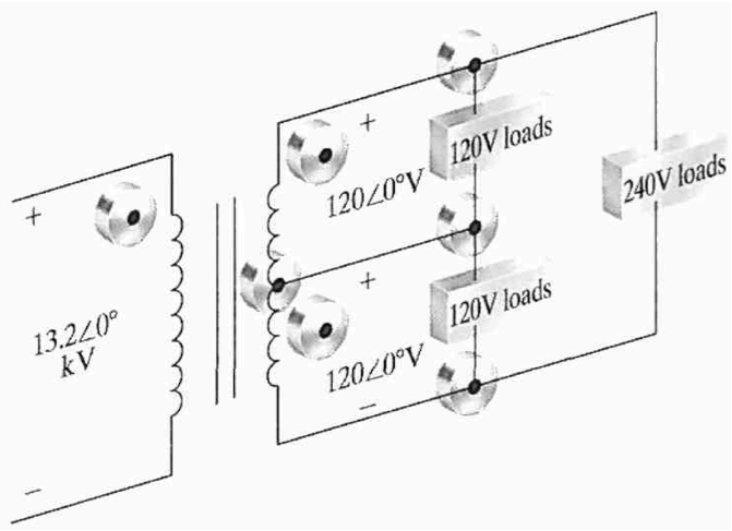

The Sinusoidal Source

A sinusoidal voltage/current source (independent or dependent) produces a voltage/current that varies sinusoidally with time.

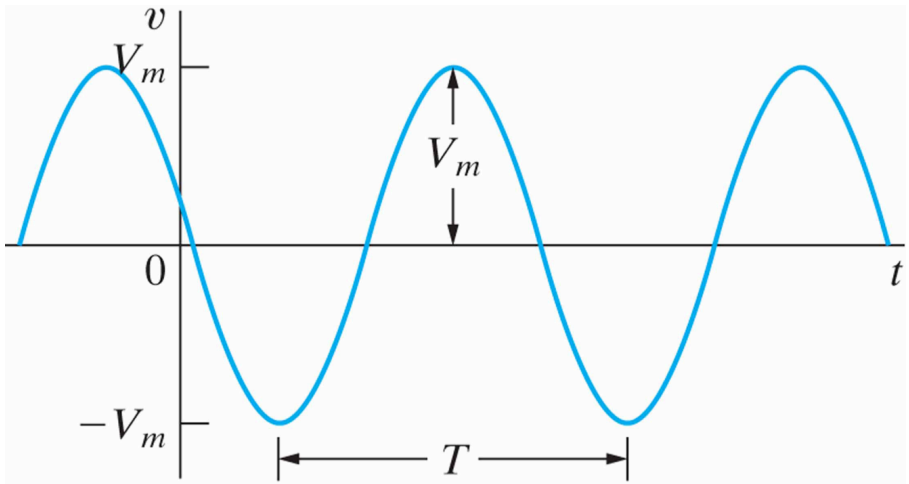

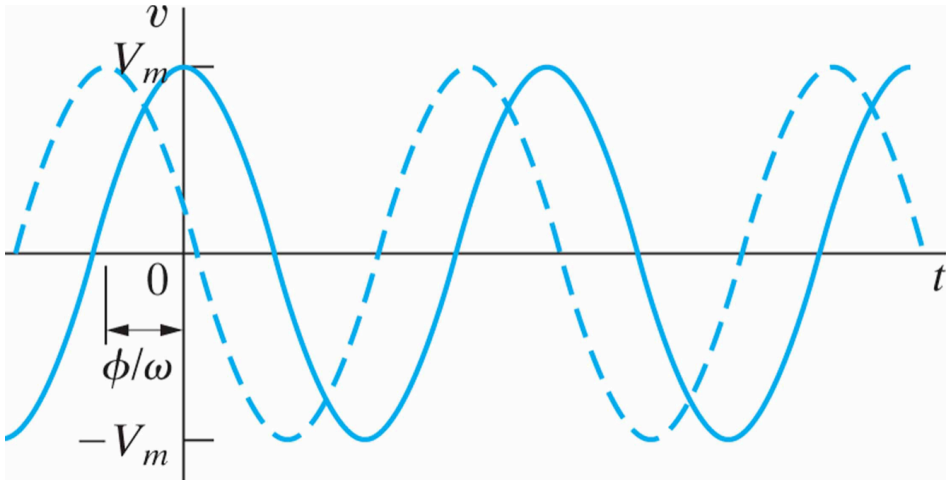

$$v = V_m \cos(\omega t + \phi)$$

$$\omega = 2\pi f = 2\pi/T$$

V_m: Maximum amplitude
ω: Angular frequency
ϕ: Phase angle (radians/degrees)

f: Frequency
T: Period

$$(\text{number of degrees}) = \frac{180^\circ}{\pi}(\text{number of radians})$$

RMS Value

The rms value of a periodic function is defined as the square root of the mean value of the squared function.

$$V_{\text{rms}} = \sqrt{\frac{1}{T}\int_{t_0}^{t_0+T} V_m^2 \cos^2(\omega t + \phi)\, dt}$$

$$V_{\text{rms}} = \frac{V_m}{\sqrt{2}} \longrightarrow \text{Power}$$

We can completely describe a specific sinusoidal signal if we know its *frequency*, *phase angle*, and *amplitude* (either the maximum or the rms value).

Example #1

A sinusoidal current has a maximum amplitude of 20 A . The current passes through one complete cycle in 1 ms. The magnitude of the current at zero time is 10 A .

a) What is the frequency of the current in hertz?

b) What is the frequency in radians per second?

c) Write the expression for $i(t)$ using the cosine function. Express ϕ in degrees.

d) What is the rms value of the current?

Solution for Example #1

a) From the statement of the problem, $T = 1$ ms; hence $f = 1/T$ = 1000 Hz.

b) $\omega = 2\pi f = 2000\pi$ rad/s.

c) We have $i(t) = I_m \cos(\omega t + \phi) = 20 \cos(2000\pi t + \phi)$, but $i(0) = 10$A. Therefore $10 = 20\cos\phi$ and $\phi = 60°$. Thus the expression for $i(t)$ becomes

$$i(t) = 20\cos(2000\pi t + 60°).$$

d) The rms value of a sinusoidal current is $I_m/\sqrt{2}$. Therefore the rms value is $20/\sqrt{2}$, or 14.14 A.

Example #2

- Calculate the rms value of the periodic triangular current in the given figure. Express your answer in terms of the peak current I_p.

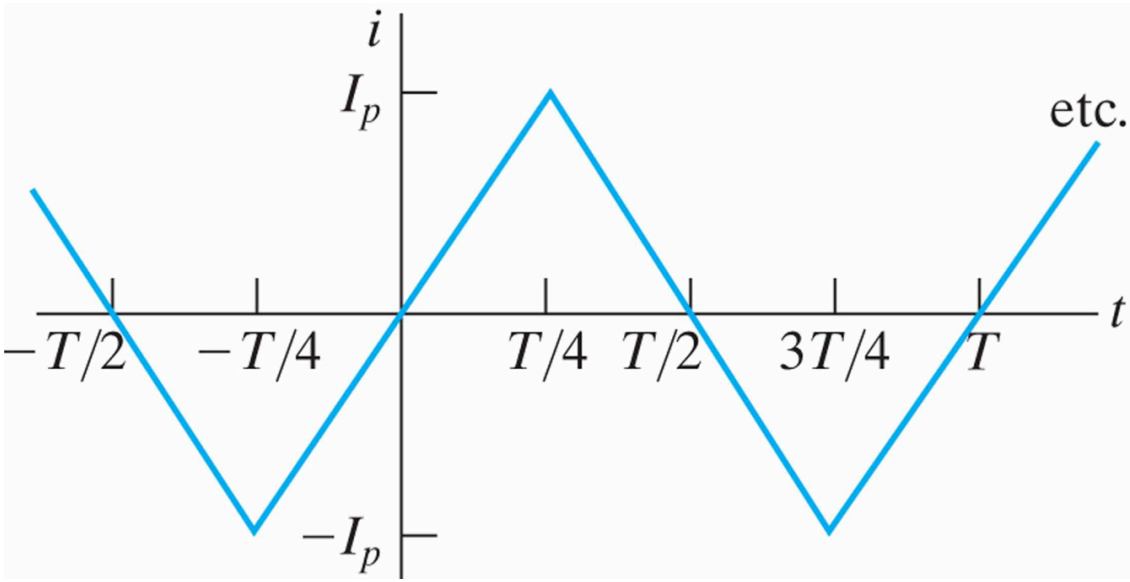

Solution for Example #2

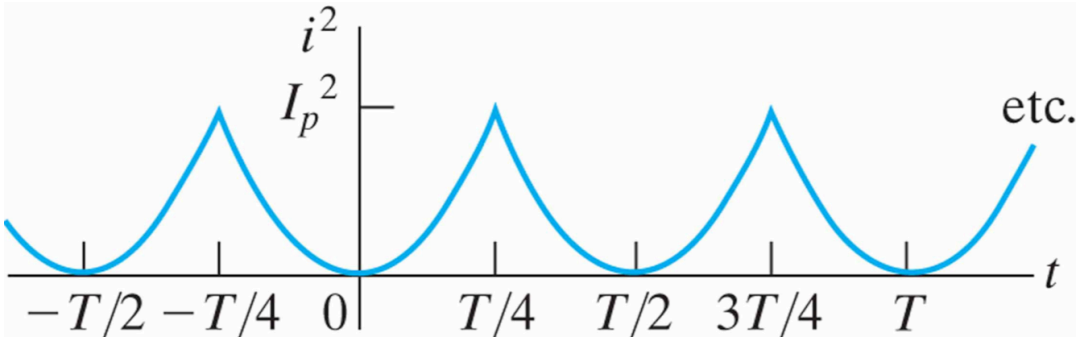

$$I_{\text{rms}} = \sqrt{\frac{1}{T}\int_{t_0}^{t_0+T} i^2 dt}$$

$$\int_{t_0}^{t_0+T} i^2 dt = 4\int_0^{T/4} i^2 dt \qquad i = \frac{4I_p}{T}t, \quad 0 < t < T/4$$

$$\int_{t_0}^{t_0+T} i^2 dt = 4\int_0^{T/4} \frac{16I_p^2}{T^2}t^2 dt = \frac{I_p^2 T}{3} \quad \Rightarrow \quad I_{\text{rms}} = \frac{I_p}{\sqrt{3}}$$

The Sinusoidal Response

$$v_s = V_m \cos(\omega t + \phi)$$

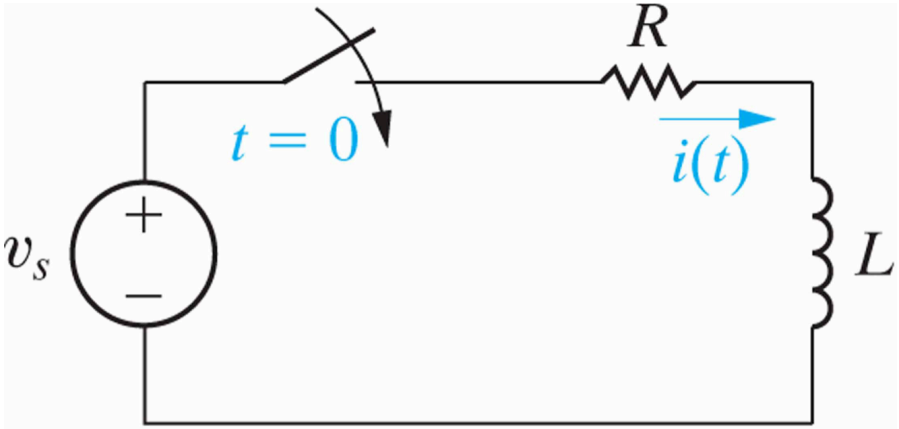

$$L\frac{di}{dt} + Ri = V_m \cos(\omega t + \phi)$$

$$i = \boxed{\frac{-V_m}{\sqrt{R^2 + \omega^2 L^2}} \cos(\phi - \theta) e^{-(R/L)t}} + \boxed{\frac{V_m}{\sqrt{R^2 + \omega^2 L^2}} \cos(\omega t + \phi - \theta)}$$

Transient component

Steady-state component

Steady-state Solution

- The steady-state solution is a sinusoidal function.
- The frequency of the response signal is identical to the frequency of the source signal. *This condition is always true in a* <u>*linear circuit*</u> *when the circuit parameters, R, L, and C, are constant.*
- The maximum amplitude of the steady-state response, in general, differs from the maximum amplitude of the source. For the circuit being discussed, the maximum amplitude of the response signal is $V_m/\sqrt{(R^2+\omega^2L^2)}$, and that of the signal source is V_m.
- The phase angle of the response signal, in general, differs from the phase angle of the source. For the circuit being discussed, the phase angle of the current is $\phi - \theta$ and that of the voltage source is ϕ.

The Phasor

The **phasor** is a complex number that carries the amplitude and phase angle information of a sinusoidal function (please see the Appendix B).

Euler's identity:

$$e^{\pm j\theta} = \cos\theta \pm j\sin\theta$$

$$\cos\theta = \Re\{e^{j\theta}\}$$ The real part

$$\sin\theta = \Im\{e^{j\theta}\}$$ The imaginary part

$$v = V_m \cos(\omega t + \phi) = V_m \Re\{e^{j(\omega t + \phi)}\} = \Re\{V_m e^{j\phi} e^{j\omega t}\}$$

Phasor transform:

$$\mathbf{V} = V_m e^{j\phi} = \mathcal{P}\{V_m \cos(\omega t + \phi)\} \quad \mathbf{V} = V_m \cos\phi + jV_m \sin\phi$$

Angle notation $1\angle\phi^\circ \equiv 1e^{j\phi}$

Inverse Phasor Transform

$$\mathbf{V} = 100\angle -26^\circ \quad \Rightarrow \quad v = 100\cos(\omega t - 60)$$

Inverse phasor transform:

$$\mathcal{P}^{-1}\{V_m e^{j\phi}\} = \Re\{V_m e^{j\phi} e^{j\omega t}\}$$

The **phasor transform** is useful in circuit analysis because it reduces the task of finding the maximum amplitude and phase angle of the steady-state sinusoidal response to the algebra of complex numbers.

- The transient component vanishes as time elapses, so *the steady-state component of the solution must also satisfy the differential equation.*
- In a linear circuit driven by sinusoidal sources, the steady-state response also is sinusoidal, and *the frequency of the sinusoidal response is the same as the frequency of the sinusoidal source.*
- Using the notation introduced in Eq. 9.11, we can postulate that the steady-state solution is of the form $\mathcal{R}\{Ae^{j\beta}e^{j\omega t}\}$, where A is the maximum amplitude of the response and β is the phase angle of the response.
- When we substitute the postulated steady-state solution into the differential equation, the exponential term $e^{j\omega t}$ cancel out, leaving the solution for A and β in the domain of complex numbers

Illustration

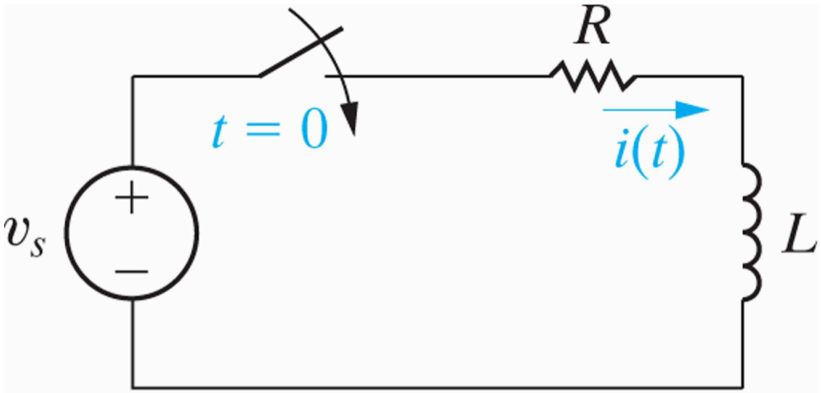

$$i_{ss}(t) = \Re\{I_m e^{j\beta} e^{j\omega t}\}$$

Substituted into Eq. 9.8

$$\Re\{j\omega L I_m e^{j\beta} e^{j\omega t}\} + \Re\{R I_m e^{j\beta} e^{j\omega t}\} = \Re\{V_m e^{j\phi} e^{j\omega t}\}$$

$$\Re\{(j\omega L + R) I_m e^{j\beta} e^{j\omega t}\} = \Re\{V_m e^{j\phi} e^{j\omega t}\}$$

$$(j\omega L + R) I_m e^{j\beta} = V_m e^{j\phi}$$

$$I_m e^{j\beta} = \frac{V_m e^{j\phi}}{R + j\omega L}$$

The phasor transform, along with the inverse phasor transform, allows you to go back and forth between the time domain and the frequency domain. Therefore, when you obtain a solution, *you are either in the time domain or the frequency domain. You cannot be in both domains simultaneously.* Any solution that contains a mixture of time domain and phasor domain nomenclature is nonsensical.

The phasor transform is also useful in circuit analysis because *it applies directly to the sum of sinusoidal function*, if

$$v = v_1 + v_2 + \cdots + v_n$$

When all the voltages on the right-hand side are sinudoidal voltages of the same frequency, then

$$\mathbf{V} = \mathbf{V}_1 + \mathbf{V}_2 + \cdots + \mathbf{V}_n$$

Example #3

If $y_1 = 20\cos(\omega t - 30°)$ and $y_2 = 40\cos(\omega t + 60°)$, express y = $y_1 + y_2$ as a single sinusoidal function.

a) Solve by using trigonometric identities.

b) Solve by using the phasor concept.

Solution for Example #2

$$y = y_1 + y_2 \Rightarrow \mathbf{Y} = \mathbf{Y}_1 + \mathbf{Y}_2$$

$$= 20\angle{-30^\circ} + 40\angle{60^\circ}$$

$$= (17.32 - j10) + (20 + j34.64)$$

$$= 37.32 + j24.64$$

$$= 44.72\angle{33.43^\circ}$$

$$\Downarrow$$

$$y = \mathcal{P}^{-1}\{44.72e^{j33.43}\} = \Re\{44.72e^{j33.43}e^{j\omega t}\}$$

$$= 44.72\cos(\omega t + 33.43^\circ)$$

The Passive Circuit Elements in the Frequency Domain

The V-I Relationship for a Resistor

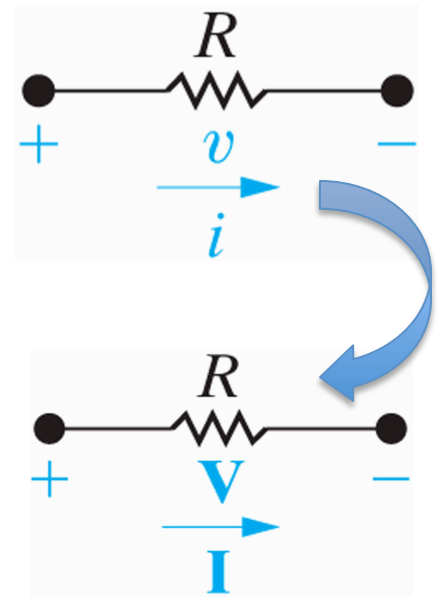

$$v = R[I_m \cos(\omega t + \theta_i)] = RI_m[\cos(\omega t + \theta_i)]$$

$$\mathbf{V} = RI_m e^{j\theta_i} = RI_m \angle \theta_i$$

$$\mathbf{V} = R\mathbf{I}$$

At the terminals of a resistor, there is no phase shift between the current and voltage.

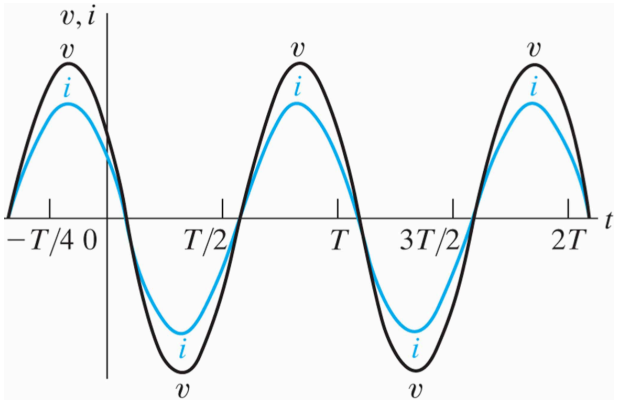

The V-I Relationship for an Inductor

$$v = L\frac{di}{dt} = -\omega L I_m \sin(\omega t + \theta_i)$$

$$v = -\omega L I_m \cos(\omega t + \theta_i - 90^\circ)$$

$$\boxed{e^{-j90} = \cos 90^\circ - j\sin 90^\circ = -j}$$

$$\mathbf{V} = -\omega L I_m e^{j(\theta_i - 90^\circ)} = \underline{-\omega L I_m e^{j\theta_i} e^{-j90^\circ}} = j\omega L I_m e^{j\theta_i} = j\omega L\mathbf{I}$$

$$\mathbf{V} = (\omega L \angle 90^\circ) I_m \angle \theta_i = \omega L I_m \angle (\theta_i + 90)^\circ$$

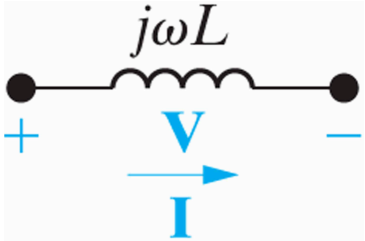

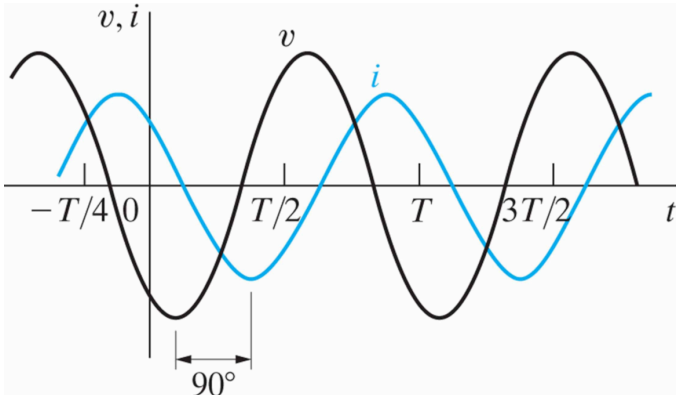

The V-I Relationship for a Capacitor

$$i = C\frac{dv}{dt}$$

$$\boxed{v = V_m \cos(\omega t + \theta_v)}$$

$$\mathbf{I} = j\omega C\mathbf{V}$$

$$\mathbf{V} = \frac{1}{j\omega C}\mathbf{I}$$

$$\mathbf{V} = \frac{1}{\omega C}\angle -90^\circ I_m \angle \theta_i^\circ = \frac{I_m}{\omega C}\angle (\theta_i - 90)^\circ$$

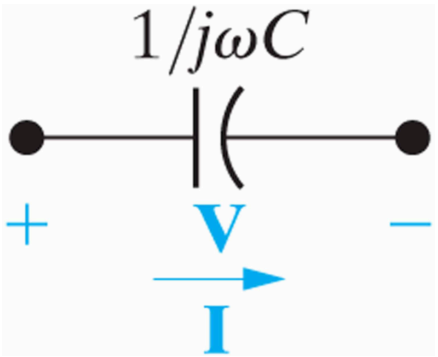

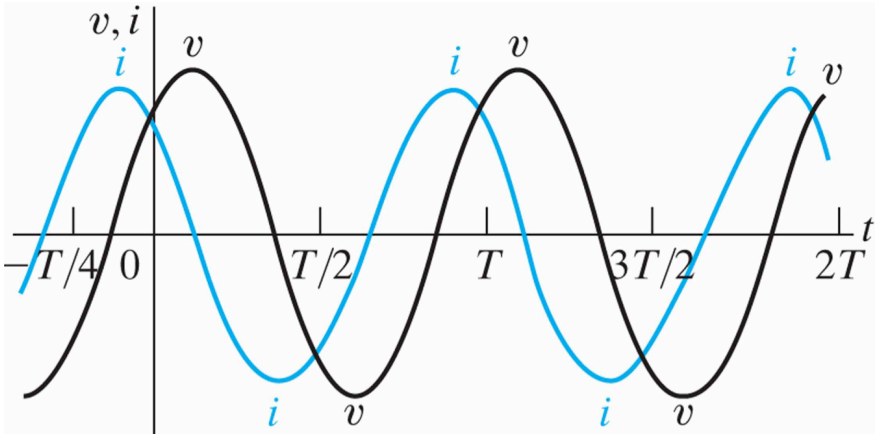

Impedance and Reactance

$$\mathbf{V} = \boxed{Z}\ \mathbf{I}$$

Impedance: measured in ohms

Reactance: the imaginary part of impedance

Circuit Element	Impedance	Reactance
Resistor	R	—
Inductor	$j\omega L$	ωL
Capacitor	$j(-1/\omega C)$	$-1/\omega C$

Kirchhoff's law in the Frequency Domain

$$v_1 + v_2 + \cdots + v_n = 0$$

$$V_{m_1}\cos(\omega t + \theta_1) + V_{m_2}\cos(\omega t + \theta_2) + \cdots + V_{m_n}\cos(\omega t + \theta_n) = 0$$

$$\Re\{V_{m_1}e^{j\theta_1}e^{j\omega t}\} + \Re\{V_{m_2}e^{j\theta_2}e^{j\omega t}\} + \cdots + \Re\{V_{m_n}e^{j\theta_n}e^{j\omega t}\}$$

$$\Re\{(V_{m_1}e^{j\theta_1} + V_{m_2}e^{j\theta_2} + \cdots + V_{m_n}e^{j\theta_n})e^{j\omega t}\} = 0$$

$$\Re\{(\mathbf{V}_1 + \mathbf{V}_2 + \cdots + \mathbf{V}_n)e^{j\omega t}\} = 0$$

$$\mathbf{V}_1 + \mathbf{V}_2 + \cdots + \mathbf{V}_n = 0 \qquad \mathbf{I}_1 + \mathbf{I}_2 + \cdots + \mathbf{I}_n = 0$$

Series, Parallel, and Delta-to-Wye Simplification

The rules for combining impedances in series or parallel and for making delta-to-wye transformations *are the same as those for resistors*. The only difference is that *combining impedances involves the algebraic manipulation of complex numbers.*

Impedances in series:

$$\mathbf{V}_{ab} = Z_1\mathbf{I} + Z_2\mathbf{I} + \cdots + Z_n\mathbf{I}$$
$$= (Z_1 + Z_2 + \cdots + Z_n)\mathbf{I}$$

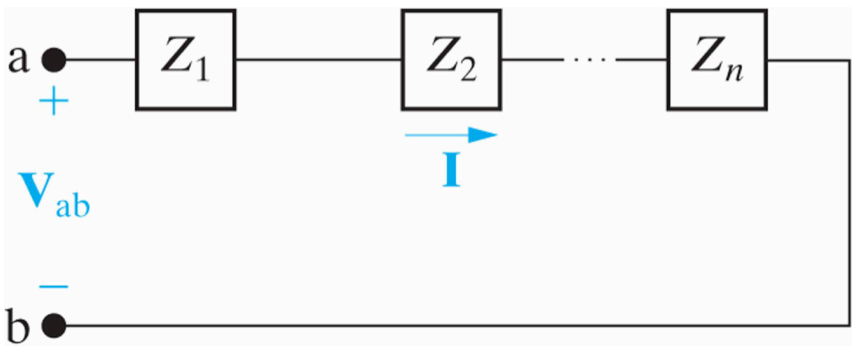

$$Z_{ab} = \frac{\mathbf{V}_{ab}}{\mathbf{I}} = Z_1 + Z_2 + \cdots + Z_n$$

Impedance in Parallel

$$\mathbf{I} = \mathbf{I}_1 + \mathbf{I}_2 + \cdots + \mathbf{I}_n$$

$$\frac{\mathbf{V}}{Z_{ab}} = \frac{\mathbf{V}}{Z_1} + \frac{\mathbf{V}}{Z_2} + \cdots + \frac{\mathbf{V}}{Z_n}$$

$$\frac{1}{Z_{ab}} = \frac{1}{Z_1} + \frac{1}{Z_2} + \cdots + \frac{1}{Z_n}$$

Two impedance

$$Z_{ab} = \frac{Z_1 Z_2}{Z_1 + Z_2}$$

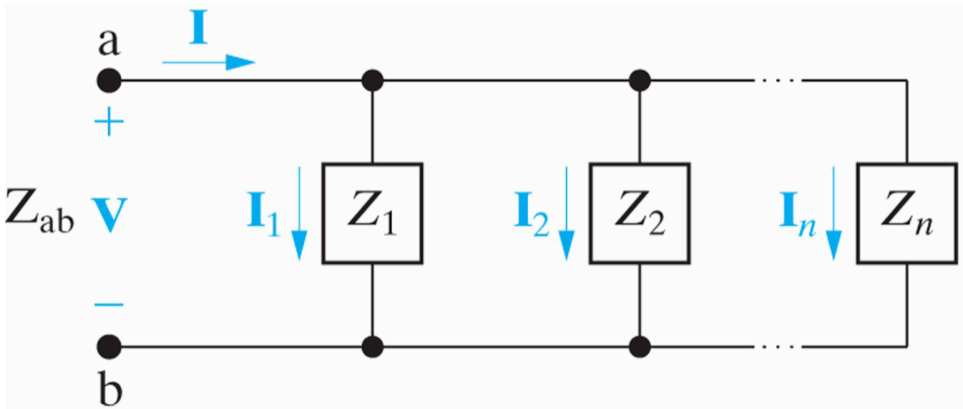

susceptance

$$Y = \frac{1}{Z} = G + jB \text{ (siemens)}$$

conductance

$$Y_{ab} = Y_1 + Y_2 + \cdots + Y_n$$

admittance

Circuit Element	Admittance (Y)	Susceptance
Resistor	G (conductance)	—
Inductor	$j(-1/\omega L)$	$-1/\omega L$
Capacitor	$j\omega C$	ωC

Delta-to-Wye Transformations

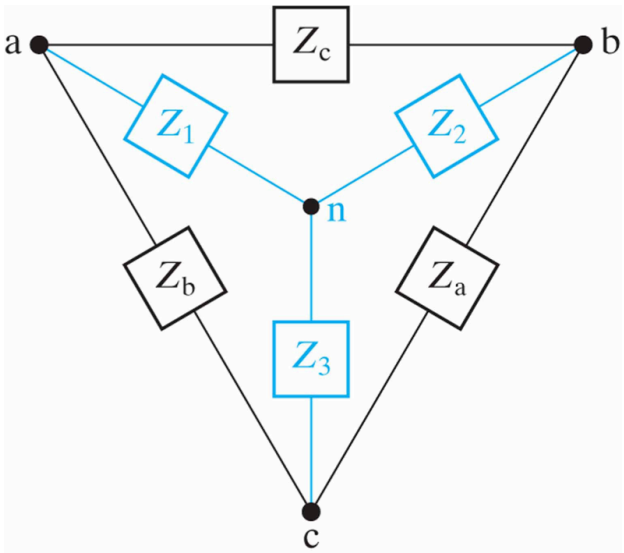

$$Z_1 = \frac{Z_b Z_c}{Z_a + Z_b + Z_c}$$

$$Z_2 = \frac{Z_c Z_a}{Z_a + Z_b + Z_c}$$

$$Z_3 = \frac{Z_a Z_b}{Z_a + Z_b + Z_c}$$

$$Z_a = \frac{Z_1 Z_2 + Z_2 Z_3 + Z_3 Z_1}{Z_1}$$

$$Z_b = \frac{Z_1 Z_2 + Z_2 Z_3 + Z_3 Z_1}{Z_2}$$

$$Z_c = \frac{Z_1 Z_2 + Z_2 Z_3 + Z_3 Z_1}{Z_3}$$

Example #4

A 90 Ω resistor, a 32 mH inductor, and a 5 μF capacitor are connected in series across the terminals of a sinusoidal voltage source. The steady-state expression for the source voltage v_s is $750 \cos(5000t + 30°)$ V.

a) Construct the frequency-domain equivalent circuit.

b) Calculate the steady-state current i by the phasor method.

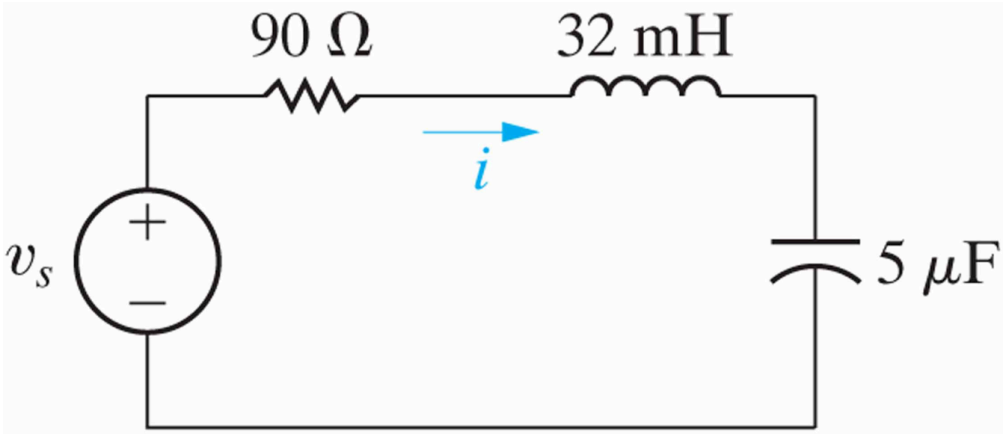

Solution for Example #4

$\omega = 5000 \text{ rad/s}$

$$Z_L = j\omega L = j(5000)(32 \times 10^{-3}) = j160\ \Omega$$

$$Z_C = j\frac{-1}{\omega C} = -j\frac{10^6}{(5000)(5)} = -j40\ \Omega$$

$$\mathbf{V}_s = 750\angle 30^\circ \text{ V}$$

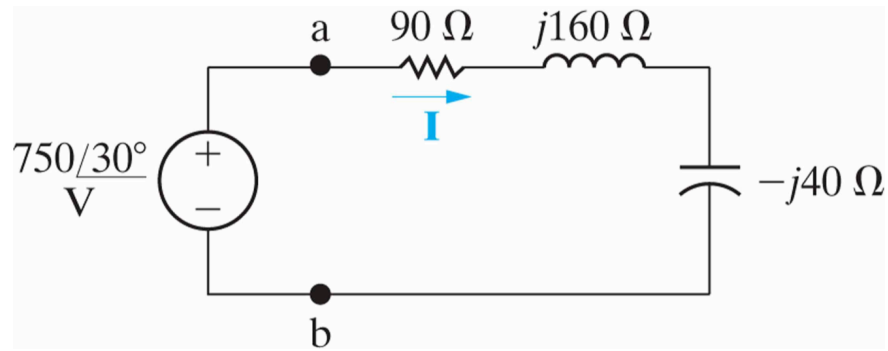

$$Z_{ab} = 90 + j160 - j40 = 90 + j120 = 150\angle 53.13^\circ\ \Omega$$

$$\mathbf{I} = \frac{750\angle 30^\circ}{150\angle 53.13^\circ} = 5\angle -23.13^\circ \text{ A}$$

$$i = 5\cos(5000t - 23.13^\circ) \text{ A}$$

Source Transformations and Thévenin-Norton Equivalent Circuits

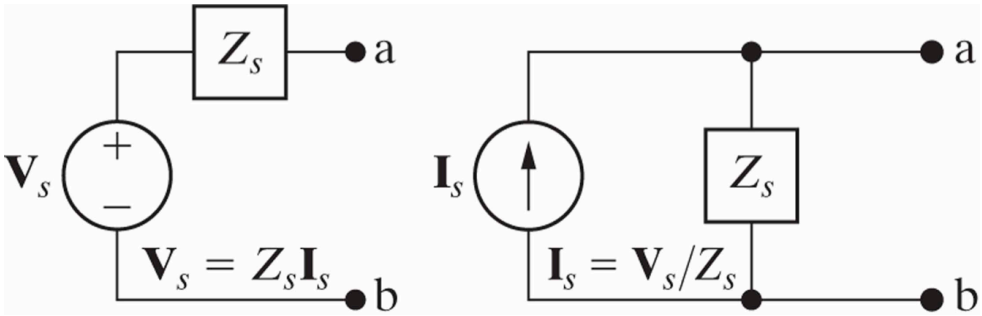

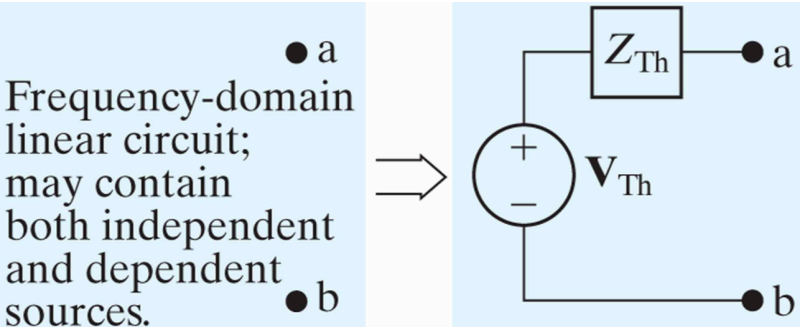

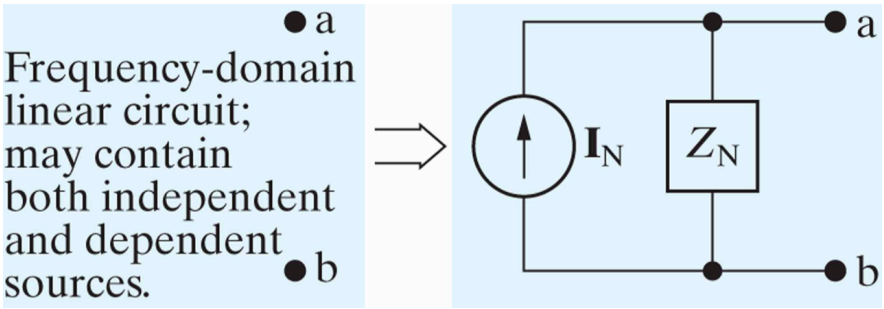

The Node-Voltage Method (Example)

The Mesh-Current Method

Example #5

Use the node-voltage method to find the branch currents $\mathbf{I}_a$, $\mathbf{I}_b$, and $\mathbf{I}_c$ in the circuit.

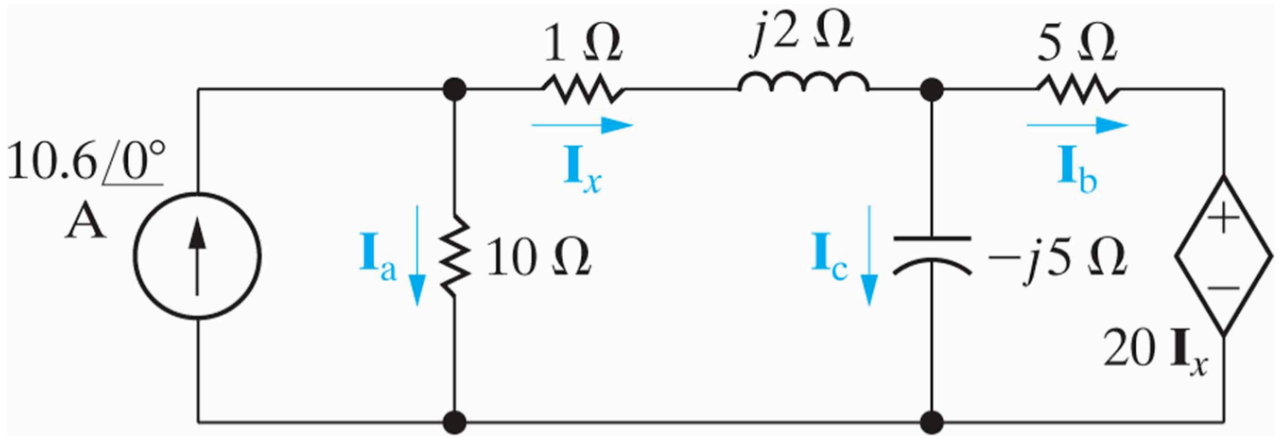

Solution for Example #5

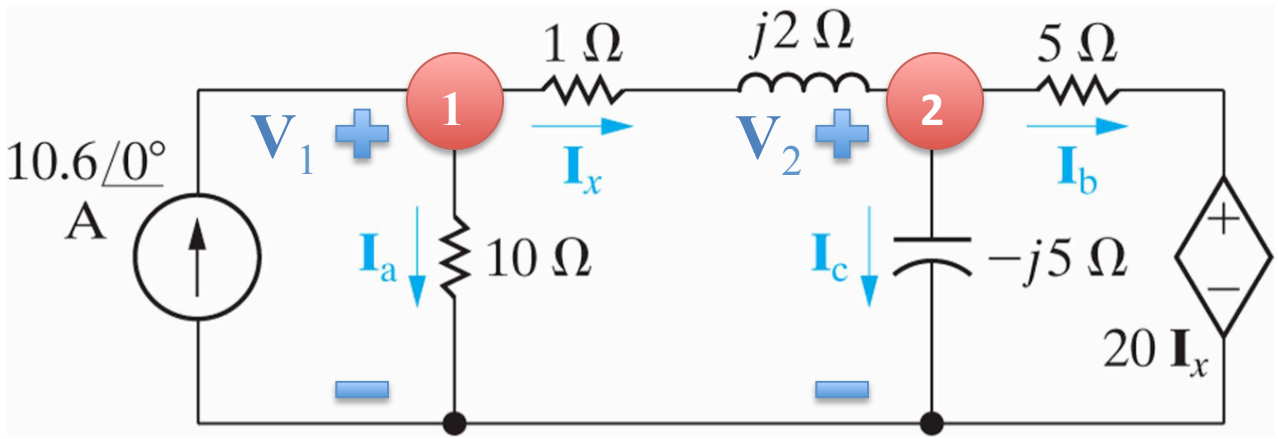

Node 1: $$-10.6 + \frac{\mathbf{V}_1}{10} + \frac{\mathbf{V}_1 - \mathbf{V}_2}{1 + j2} = 0$$

Node 2: $$\frac{\mathbf{V}_2 - \mathbf{V}_1}{1 + j2} + \frac{\mathbf{V}_2}{-j5} + \frac{\mathbf{V}_2 - 20\mathbf{I}_x}{5} = 0$$

$$\mathbf{I}_x = \frac{\mathbf{V}_1 - \mathbf{V}_2}{1 + j2}$$

$$\boxed{\begin{aligned} \mathbf{V}_1 &= 68.40 - j16.80 \text{ V} \\ \mathbf{V}_2 &= 68 - j26 \text{ V} \end{aligned}}$$

$$\mathbf{I}_a = \frac{\mathbf{V}_1}{10} = 6.84 - j1.68 \text{ A},$$

$$\mathbf{I}_x = \frac{\mathbf{V}_1 - \mathbf{V}_2}{1 + j2} = 3.76 + j1.68 \text{ A},$$

$$\mathbf{I}_b = \frac{\mathbf{V}_2 - 20\mathbf{I}_x}{5} = -1.44 - j11.92 \text{ A},$$

$$\mathbf{I}_c = \frac{\mathbf{V}_2}{-j5} = 5.2 + j13.6 \text{ A}.$$

Check $\mathbf{I}_x = \mathbf{I}_b + \mathbf{I}_c$

The Transformer

*A **transformer** is a device that is based on magnetic coupling*. Transformers are used in both communication and power circuits.

- **linear transformer:** is found primarily in communication circuits
- **Ideal transformer:** is used to model the ferromagnetic transformer found in power systems.

The Analysis of a Linear Transformer Circuit

A simple **transformer** is formed *when two coils are wound on a single core to ensure magnetic coupling*.

- **Primary winding:** the transformer winding connected to the source;
- **Secondary winding:** the winding connected to the load as the.

R_1 = the resistance of the primary winding
R_2 = the resistance of the secondary winding
L_1 = the self-inductance of the primary winding
L_2 = the self-inductance of the secondary winding
M = the mutual inductance

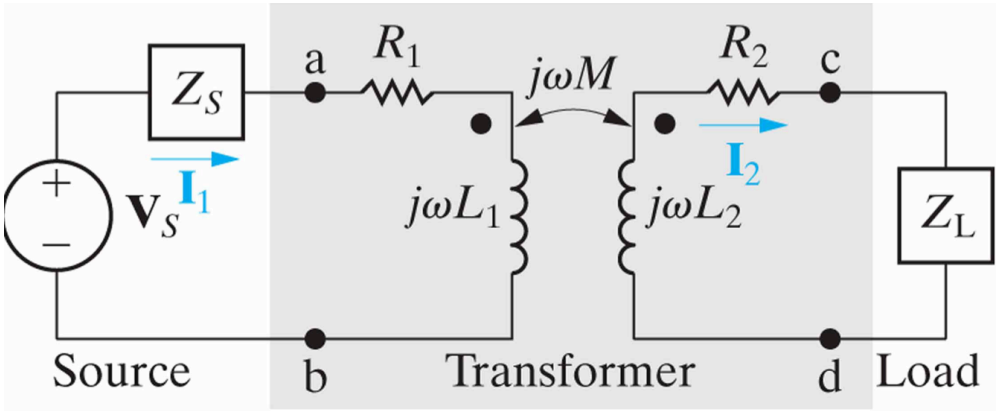

$$\mathbf{V}_s = (Z_s + R_1 + j\omega L_1)\mathbf{I}_1 - j\omega M\mathbf{I}_2$$

$$0 = -j\omega M\mathbf{I}_1 + (R_2 + j\omega L_2 + Z_L)\mathbf{I}_2$$

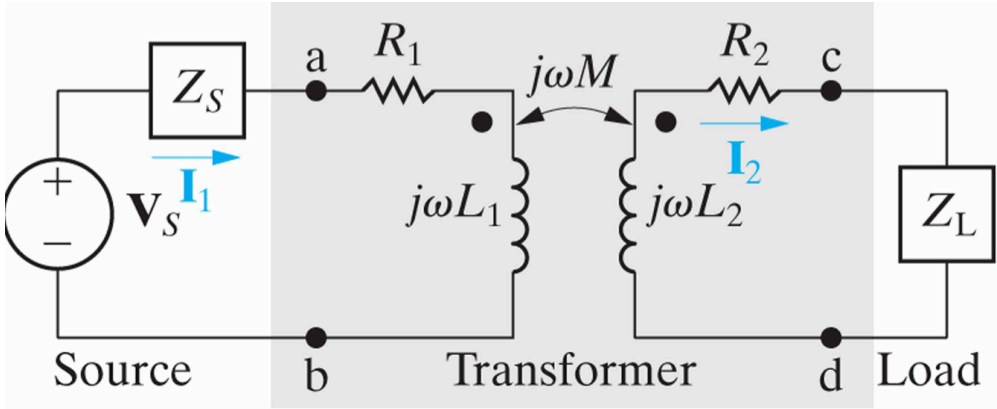

$$Z_{11} = Z_s + R_1 + j\omega L_1$$

$$Z_{22} = R_2 + j\omega L_2 + Z_L$$

$$\mathbf{I}_1 = \frac{Z_{22}}{Z_{11}Z_{22} + \omega^2 M^2}\mathbf{V}_s \qquad \mathbf{I}_2 = \frac{j\omega M}{Z_{11}Z_{22} + \omega^2 M^2}\mathbf{V}_s = \frac{j\omega M}{Z_{22}}\mathbf{I}_1$$

$$\frac{\mathbf{V}_s}{\mathbf{I}_1} = Z_{\text{int}} = \frac{Z_{11}Z_{22} + \omega^2 M^2}{Z_{22}} = Z_{11} + \frac{\omega^2 M^2}{Z_{22}}$$

$$Z_{ab} = Z_{11} + \frac{\omega^2 M^2}{Z_{22}} - Z_s = R_1 + j\omega L_1 + \frac{\omega^2 M^2}{(R_2 + j\omega L_2 + Z_L)}$$

The impedance Z_{ab} is independent of the magnetic polarity of the transformer!

Reflected Impedance

$$Z_{ab} = Z_{11} + \frac{\omega^2 M^2}{Z_{22}} - Z_s = R_1 + j\omega L_1 + \boxed{\frac{\omega^2 M^2}{(R_2 + j\omega L_2 + Z_L)}}$$

Reflected impedance Z_r

$$Z_L = R_L + jX_L$$

$$Z_r = \frac{\omega^2 M^2}{R_2 + R_L + j(\omega L_2 + X_L)} = \frac{\omega^2 M^2[(R_2 + R_L) - j(\omega L_2 + X_L)]}{(R_2 + R_L)^2 + (\omega L_2 + X_L)^2}$$

$$= \frac{\omega^2 M^2}{|Z_{22}|^2}[(R_2 + R_L) - j(\omega L_2 + X_L)]$$

The Ideal Transformer

An **ideal transformer** consists of two magnetically coupled coils having N_1 and N_2 turns, respectively, and exhibiting these three properties:

1. The coefficient of coupling is unity ($k = 1$).
2. The self-inductance of each coil is infinite ($L_1 = L_2 = \infty$).
3. The coil losses, due to parasitic resistance, are negligible.

Exploring Limiting Values

$$Z_{ab} = Z_{11} + \frac{\omega^2 M^2}{Z_{22}} - Z_s = R_1 + j\omega L_1 + \frac{\omega^2 M^2}{(R_2 + j\omega L_2 + Z_L)}$$

$$\boxed{Z_{22} = R_2 + R_L + j(\omega L_2 + X_L) = R_{22} + jX_{22}}$$

$$Z_{ab} = R_1 + \frac{\omega^2 M^2 R_{22}}{R_{22}^2 + X_{22}^2} + j\left(\omega L_1 - \frac{\omega^2 M^2 X_{22}}{R_{22}^2 + X_{22}^2}\right) = R_{ab} + j\boxed{X_{ab}}$$

$$M^2 = L_1 L_2$$

$$X_{ab} = \omega L_1 - \frac{(\omega L_1)(\omega L_2) X_{22}}{R_{22}^2 + X_{22}^2} = \omega L_1 \left(1 - \frac{\omega L_2 X_{22}}{R_{22}^2 + X_{22}^2}\right)$$

$$X_{22} = \omega L_2 + X_L$$

$$X_{ab} = \omega L_1 \left(\frac{R_{22}^2 + \omega L_2 X_L + X_L^2}{R_{22}^2 + X_{22}^2}\right)$$

Factoring ωL_2 out of the numerator and denominator yields:

$$X_{ab} = \frac{L_1}{L_2} \frac{X_L + (R_{22}^2 + X_L^2)/\omega L_2}{(R_{22}/\omega L_2)^2 + [1 + (X_L/\omega L_2)]^2}$$

$$\boxed{L_1 \to \infty,\ L_2 \to \infty, \text{ and } k \to 1.0 \qquad L_1/L_2 = (N_1/N_2)^2}$$

$$X_{ab} = \left(\frac{N_1}{N_2}\right)^2 X_L \qquad \frac{\omega^2 M^2 R_{22}}{R_{22}^2 + X_{22}^2} = \frac{L_1}{L_2} R_{22} = \left(\frac{N_1}{N_2}\right)^2 R_{22}$$

$$Z_{ab} = R_1 + \left(\frac{N_1}{N_2}\right)^2 R_2 + \boxed{\left(\frac{N_1}{N_2}\right)^2} (R_L + jX_L)$$

Scaling factor

Determining the Voltage and Current Ratios

(a)

$$\mathbf{I}_1 = \frac{\mathbf{V}_1}{j\omega L_1}$$

$$\mathbf{V}_2 = j\omega M \mathbf{I}_1$$

$$\mathbf{V}_2 = \frac{M}{L_1}\mathbf{V}_1$$

$M^2 = L_1 L_2$

$$\mathbf{V}_2 = \sqrt{\frac{L_2}{L_1}}\mathbf{V}_1$$

$L_1/L_2 = (N_1/N_2)^2$

$$\boxed{\frac{\mathbf{V}_1}{N_1} = \frac{\mathbf{V}_2}{N_2}}$$

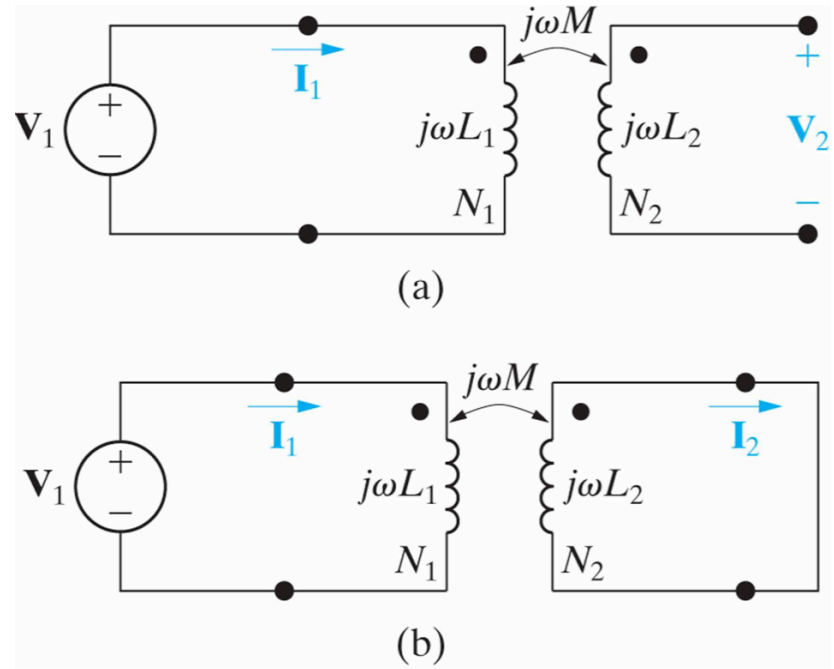

(b)

$$0 = -j\omega M \mathbf{I}_1 + j\omega L_2 \mathbf{I}_2$$

$$\frac{\mathbf{I}_1}{\mathbf{I}_2} = \frac{L_2}{M} = \frac{L_2}{\sqrt{L_1 L_2}} = \sqrt{\frac{L_2}{L_1}} = \frac{N_2}{N_1}$$

$$\mathbf{I}_1 N_1 = \mathbf{I}_2 N_2$$

$R_1 = R_2 = 0$

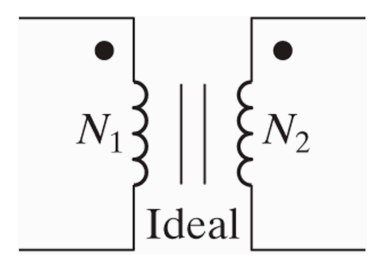

Determining the Polarity of the Voltage and Current Ratios

a. If the coil voltages $\mathbf{V}_1$ and $\mathbf{V}_2$ *are both positive or negative* at the dot -marked terminal, *use a plus sign*, Otherwise, use a negative sign.

b. If the coil currents $\mathbf{I}_1$ and $\mathbf{I}_2$ are *both directed into or out* of the dot-marked terminal, *use a minus sign*. Otherwise, use a plus sign.

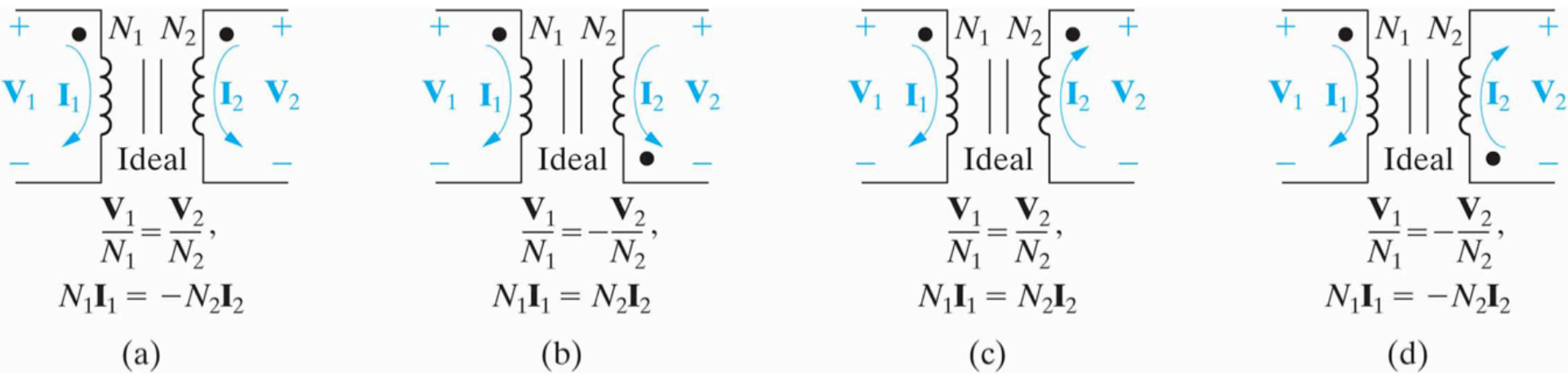

$$a = \frac{N_2}{N_1}$$

Important parameter for ideal transformer!

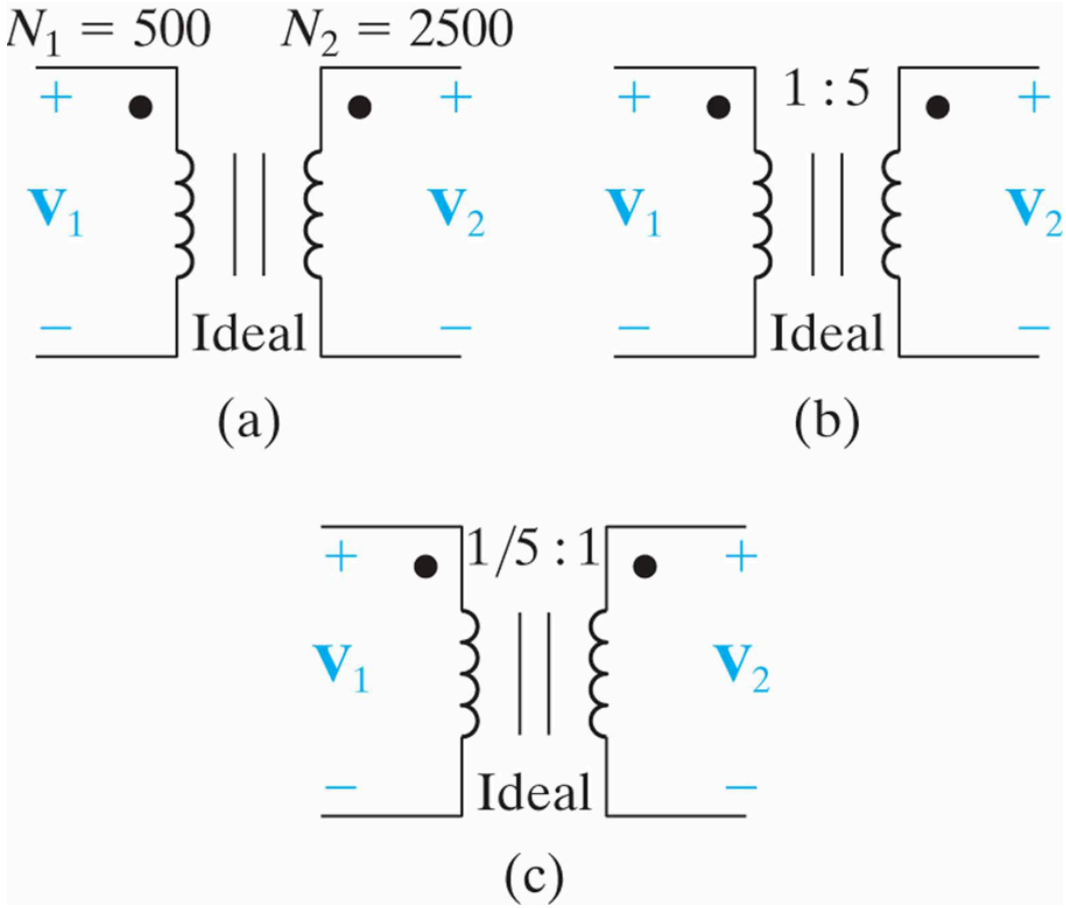

Ideal Transformer Used for Impedance Matching

$$\mathbf{V}_1 = \frac{\mathbf{V}_2}{a} \qquad \mathbf{I}_1 = a\mathbf{I}_2$$

$$Z_{IN} = \frac{\mathbf{V}_1}{\mathbf{I}_1} = \frac{1}{a^2}\frac{\mathbf{V}_2}{\mathbf{I}_2} = \frac{1}{a^2}Z_L$$

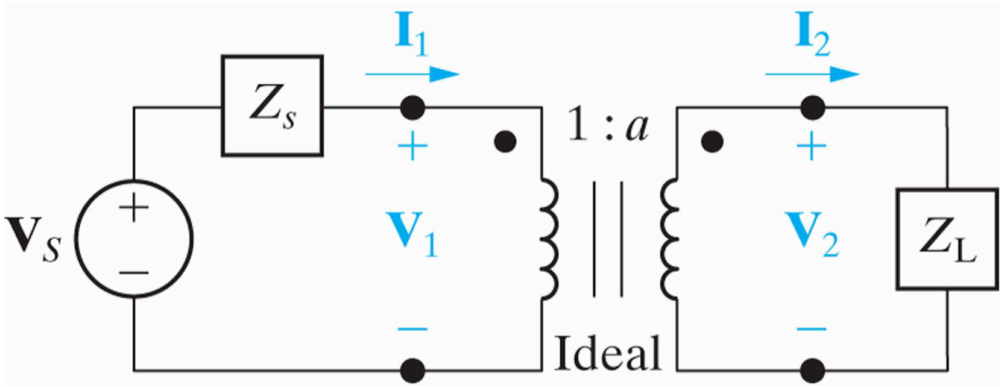

Thus, the ideal transformer's secondary coil reflects the load impedance back to the primary coil, with the scaling factor $1/a^2$.

Note that *the ideal transformer changes the magnitude of Z_L but does not affect its phase angle*. Whether Z_{IN} is greater or less than Z_L depends on the turns ratio a.

Example #6

The load impedance connected to the secondary winding of the ideal transformer consists of a $237.5\ \mathrm{m\Omega}$ resistor in series with a $125\ \mu\mathrm{H}$ inductor.

If the sinusoidal voltage source (v_g) is generat- ing the voltage $2500\cos 400t\ \mathrm{V}$, find the steady- state expressions for: (a) i_1; (b) v_1; (c) i_2; and (d) v_2.

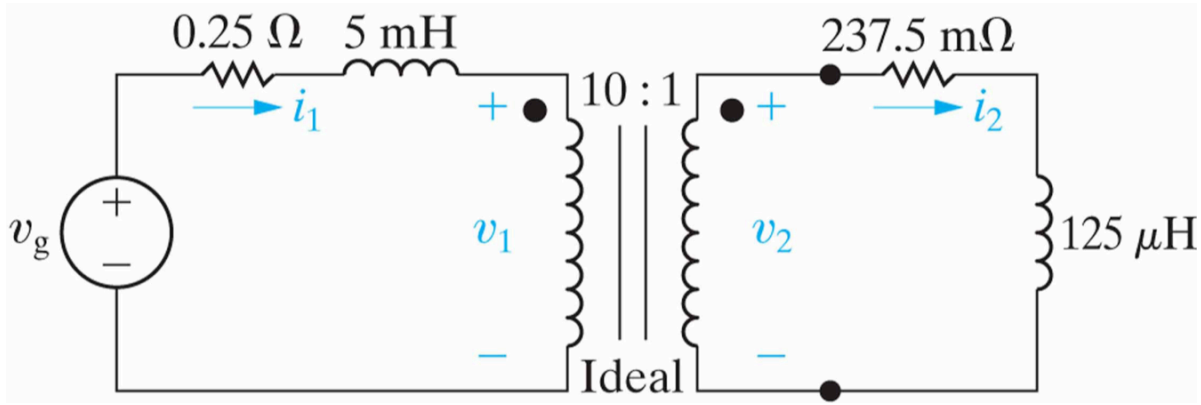

Solution for Example #6

$$2500\angle 0^\circ = (0.25 + j2)\mathbf{I}_1 + \mathbf{V}_1$$

$$\mathbf{V}_1 = 10\mathbf{V}_2 = 10[(0.2375 + j0.05)\mathbf{I}_2]$$

$$\boxed{\mathbf{I}_2 = 10\mathbf{I}_1}$$

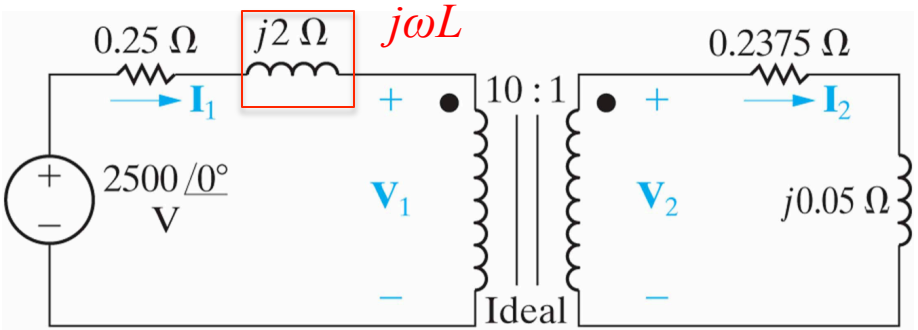

Phasor domain equivalent circuit

$$\mathbf{I}_1 = 100\angle -16.26^\circ \text{ A}$$

$$\mathbf{V}_1 = 2500\angle 0^\circ - (100\angle -16.26^\circ)(0.25 + j2)$$
$$= 2420 - j185 = 2427.06\angle -4.37^\circ \text{ V}$$

$$i_1 = 100\cos(400t - 16.26^\circ) \text{ A}$$

$$v_1 = 2427.06\cos(400t - 4.37^\circ) \text{ V}$$

Phasor Diagrams

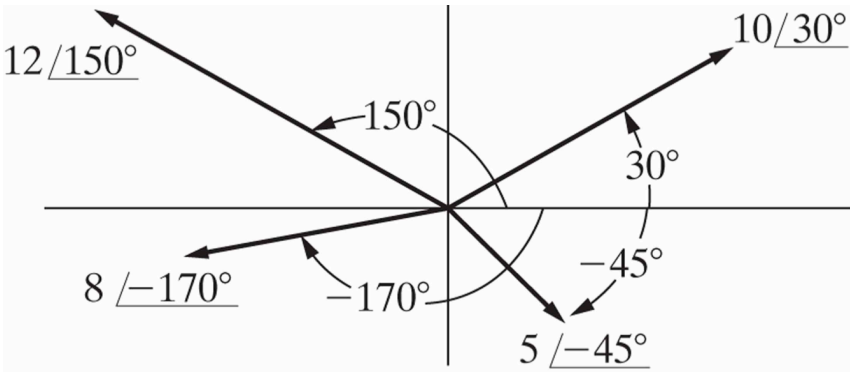

Constructing phasor diagrams of circuit quantities generally *involves both currents and voltages*. As a result, two different magnitude scales are necessary, one for currents and one for voltages.

The ability to visualize a phasor quantity on the complex-number plane can be useful when you are *checking* pocket calculator calculations.

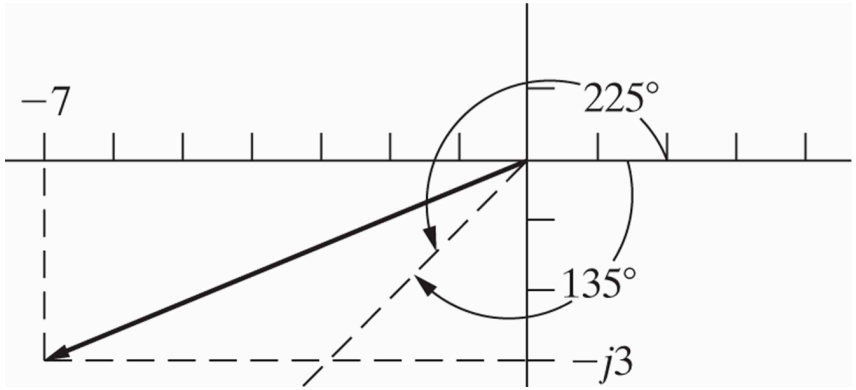

Example #7

- For the given circuit, use a phasor diagram to find the value of R that will cause the current through that resistor, i_R, to lag the source current, i_s, by 45° when ω = 5 krad/s.

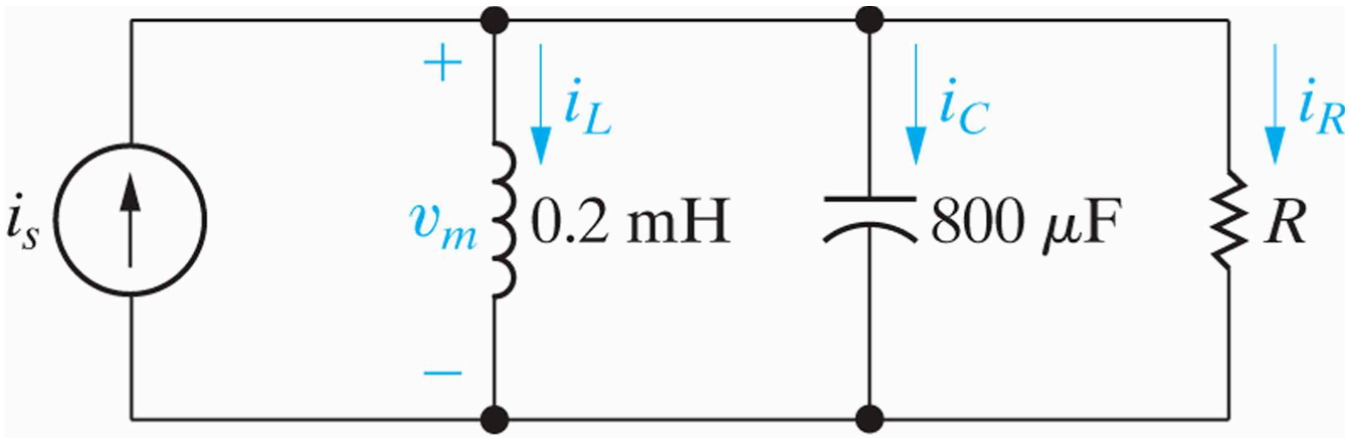

Solution for Example #7

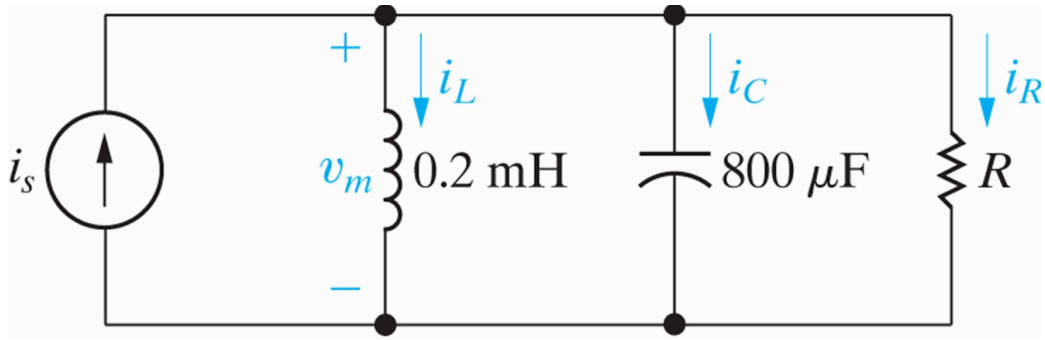

$$\mathbf{I}_L = \frac{V_m \angle 0^\circ}{j(5000)(0.2 \times 10^{-3})} = V_m \angle -90^\circ$$

$$\mathbf{I}_C = \frac{V_m \angle 0^\circ}{-j/(5000)(800 \times 10^{-6})} = 4V_m \angle 90^\circ$$

$$\mathbf{I}_R = \frac{V_m \angle 0^\circ}{R} = \frac{V_m}{R} \angle 0^\circ$$

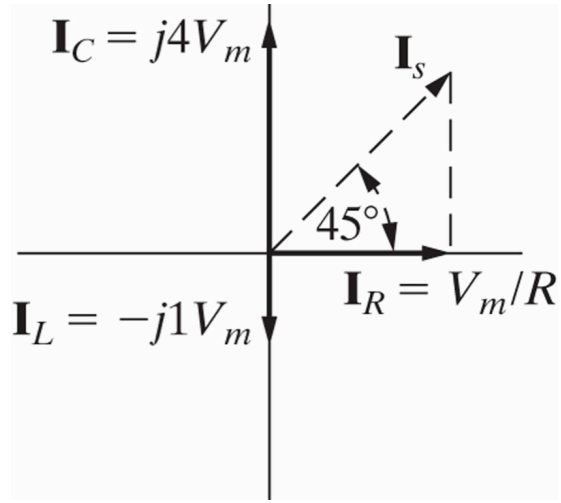

R = 1/3 Ω

Summary

Element	Impedance (Z)	Reactance	Admittance (Y)	Susceptance
Resistor	R (resistance)	—	G (conductance)	—
Capacitor	$j(-1/\omega C)$	$-1/\omega C$	$j\omega C$	ωC
Inductor	$j\omega L$	ωL	$j(-1/\omega L)$	$-1/\omega L$