Problem # 1

If the interconnection in the Figure is valid, find the total power developed in the circuit. If the interconnection is not valid, explain why.

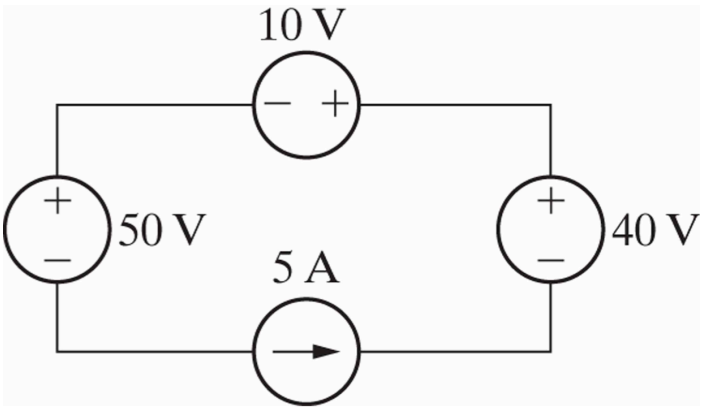

Solution:

The interconnect is valid since the voltage sources can all carry 5 A of current supplied by the current source, and the current source can carry the voltage drop required by the interconnection. Note that the branch containing the 10 V, 40 V, and 5 A sources must have the same voltage drop as the branch containing the 50 V source, so the 5 A current source must have a voltage drop of 20 V, positive at the right. The voltages and currents are summarize in the circuit below:

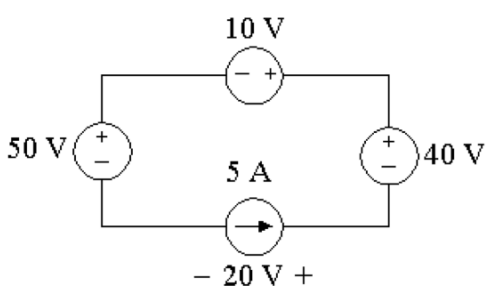

$$P_{50\text{V}} = (50)(5) = 250 \text{ W} \quad \text{(abs)}$$

$$P_{10\text{V}} = (10)(5) = 50 \text{ W} \quad \text{(abs)}$$

$$P_{40\text{V}} = -(40)(5) = -200 \text{ W} \quad \text{(dev)}$$

$$P_{5\text{A}} = -(20)(5) = -100 \text{ W} \quad \text{(dev)}$$

$$\sum P_{\text{dev}} = 300 \text{ W}$$

Problem #2

A variety of current source values were applied to the device shown in the Figure. The power absorbed by the device for each value of current is recorded in the Table. Use the values in the table to construct a circuit model for the device consisting of a single element.

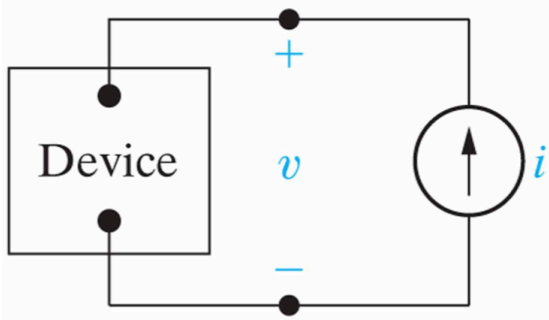

i (μA)	p (mW)
50	5.5
100	22.0
150	49.5
200	88.0
250	137.5
300	198.0

The resistor value is the ratio of the power to the square of the current: $R = \frac{p}{i^2}$. Using the values for power and current in Fig. P2.12(b),

$$\frac{5.5 \times 10^{-3}}{(50 \times 10^{-6})^2} = \frac{22 \times 10^{-3}}{(100 \times 10^{-6})^2} = \frac{49.5 \times 10^{-3}}{(150 \times 10^{-6})^2} = \frac{88 \times 10^{-3}}{(200 \times 10^{-6})^2}$$

$$= \frac{137.5 \times 10^{-3}}{(250 \times 10^{-6})^2} = \frac{198 \times 10^{-3}}{(300 \times 10^{-6})^2} = 2.2 \text{ M}\Omega$$

Note that this is a value from Appendix H.

Problem #3

The voltage and current were measured at the terminals of the device shown in the Figure. The results are shown in the Table.

a) Construct a circuit model for this device using an ideal current source and a resistor.

b) Use the model to predict the amount of power the device will deliver to a 20Ω resistor.

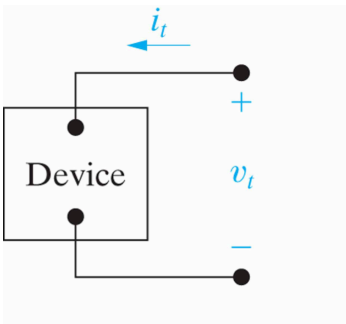

v_t (V)	i_t (A)
100	0
120	4
140	8
160	12
180	16

Solution:

[a] Plot the v—i characteristic:

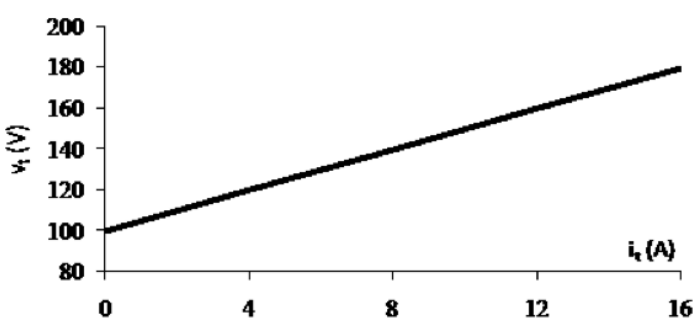

From the plot:

$$R = \frac{\Delta v}{\Delta i} = \frac{(180 - 100)}{(16 - 0)} = 5\,\Omega$$

When $i_t = 0$, $v_t = 100$ V; therefore the ideal current source must have a current of $100/5 = 20$ A

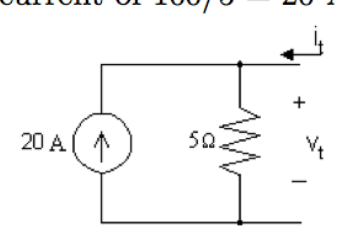

[b] We attach a $20\,\Omega$ resistor to the device model developed in part (a):

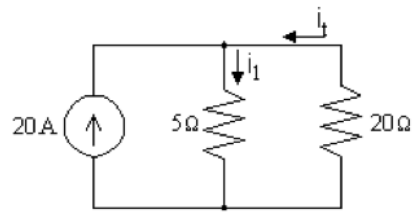

Write a KCL equation at the top node:

$20 + i_t = i_1$

Write a KVL equation for the right loop, in the direction of the two currents, using Ohm's law:

$5i_1 + 20i_t = 0$

Combining the two equations and solving,

$5(20 + i_t) + 20i_t = 0 \qquad \text{so} \qquad 25i_t = -100; \qquad \text{thus} \qquad i_t = -4\,\text{A}$

Now calculate the power dissipated by the resistor:

$p_{20\,\Omega} = 20i_t^2 = 20(-4)^2 = 320\,\text{W}$

Problem #4

The current i_o in the following circuit is 1 A.

a) Find the power dissipated in each resistor.
b) Verify that the total power dissipated in the circuit equals the power developed by the 150 V source.

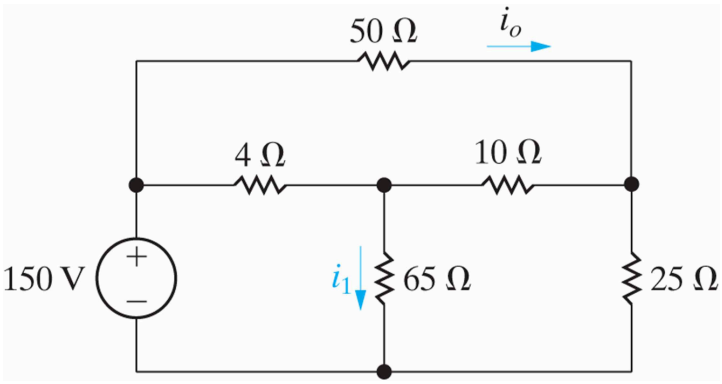

Solution:

[a]

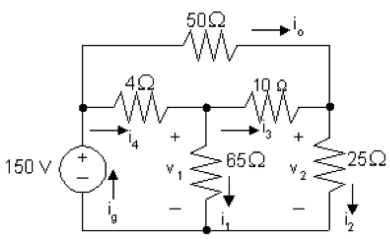

$$v_2 = 150 - 50(1) = 100\text{V}$$

$$i_2 = \frac{v_2}{25} = 4\text{A}$$

$$i_3 + 1 = i_2, \qquad i_3 = 4 - 1 = 3\text{A}$$

$$v_1 = 10i_3 + 25i_2 = 10(3) + 25(4) = 130\text{V}$$

$$i_1 = \frac{v_1}{65} = \frac{130}{65} = 2\text{A}$$

Note also that

$$i_4 = i_1 + i_3 = 2 + 3 = 5\,\text{A}$$

$$i_g = i_4 + i_o = 5 + 1 = 6\,\text{A}$$

[b]

$$p_{4\Omega} = 5^2(4) = 100\text{ W}$$

$$p_{50\Omega} = 1^2(50) = 50\text{ W}$$

$$p_{65\Omega} = 2^2(65) = 260\text{ W}$$

$$p_{10\Omega} = 3^2(10) = 90\text{ W}$$

$$p_{25\Omega} = 4^2(25) = 400\text{ W}$$

[c] $\sum P_{\text{dis}} = 100 + 50 + 260 + 90 + 400 = 900\,\text{W}$

$$P_{\text{dev}} = 150 i_g = 150(6) = 900\,\text{W}$$

Problem #5

Find (a) i_o, (b) i_1 and (c) i_2 in the following circuit.

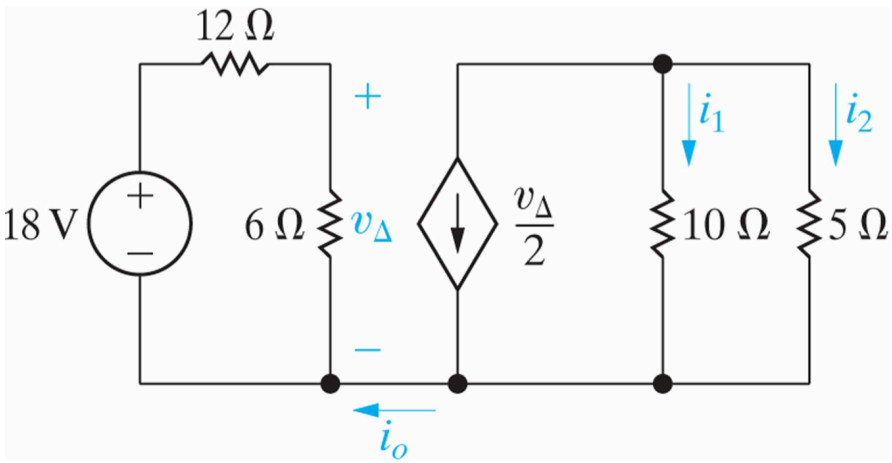

Solution:

[a] $i_o = 0$ because no current can exist in a single conductor connecting two parts of a circuit.

[b]

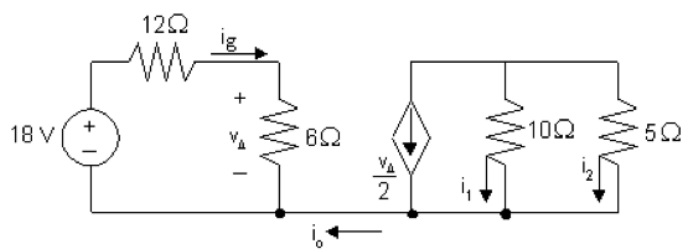

$$18 = (12+6)i_g \qquad i_g = 1 \text{ A}$$

$$v_\Delta = 6i_g = 6\text{V} \qquad v_\Delta/2 = 3 \text{ A}$$

$$10i_1 = 5i_2, \text{ so } i_1 + 2i_1 = -3 \text{ A; therefore, } i_1 = -1 \text{ A}$$

[c] $i_2 = 2i_1 = -2$ A.